FRAME DETAILS

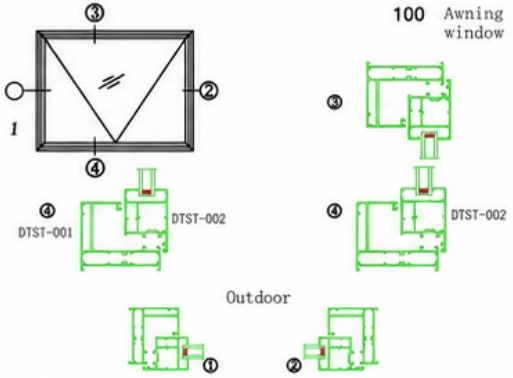

INSTALLATION DETAIL

ROUGH OPENING:-

Window dimensions will be exactly your window size with frame.
Recommended rough opening is between 3/4" (19mm) – 1" (25mm) larger than the window width and height.
Ensure that the rough opening is plumb, level and square, and the walls in the opening are not twisted.

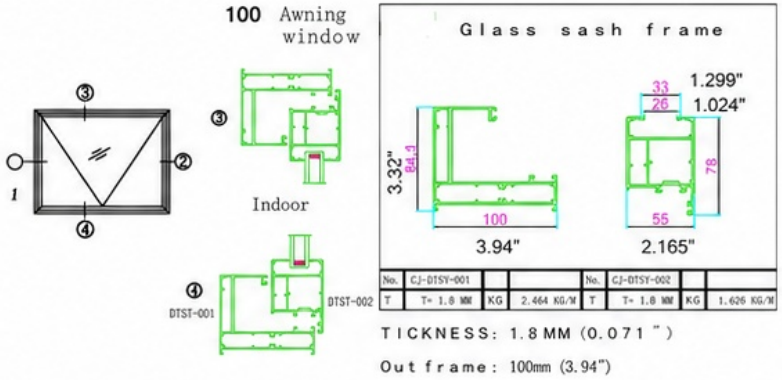

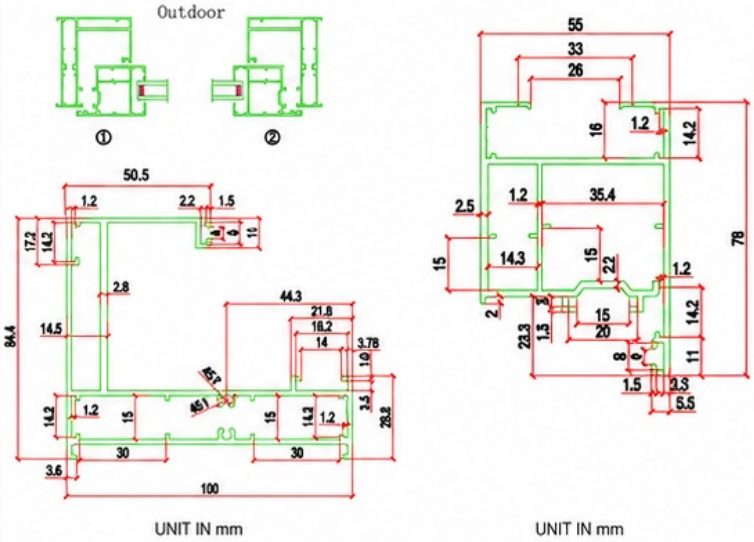

GLASS DETAILS

- DOUBLE TEMPERED GLASS
- EACH PANE 5MM GLASS
- E GLASS 100% BLOCK UV
- FILLED WITH ARGON GAS
- 5MM GLASS PANE + ARGON GAS + 5MM GLASS PANE

BOTTOM FRAME DETAIL

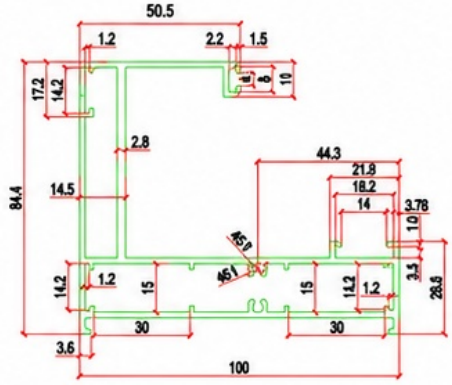

UNIT IN mm

A1 DOORS & WINDOWS

PROJECT

PRODUCT TYPE

Gas Strut Window Specification

Notes

1. All dimensions are in ft & inches.
2. All dimensions are to be checked on site.
3. Verify all dimensions and details before fabrication and construction.